Instructions for a Mifactori XYZ knot

Made by Lars Zimmermann of Mifactori

More information and extended documentation of this can be found at https://mifactori.de

(Probably here https://mifactori.de/xyz-knots)

Instructions made 2020 with the freeware software Studio Vs 2.0 | Download here: https://www.bricklink.com/v3/studio/download.page

License: These instructions are licensed under the Creative Commons Attribution License 4.0 (CC-BY 4.0)

1

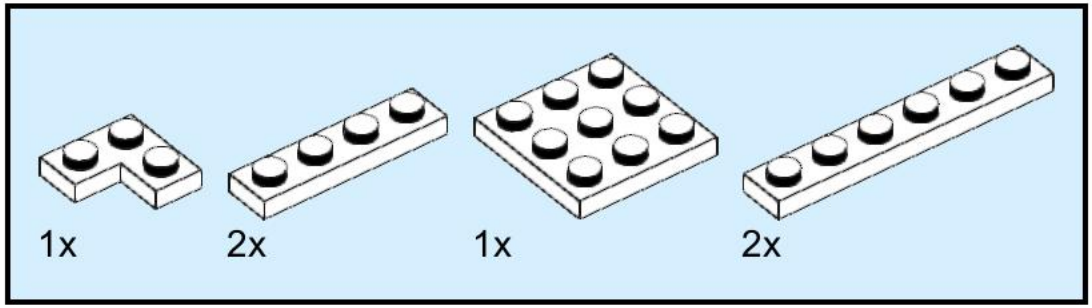

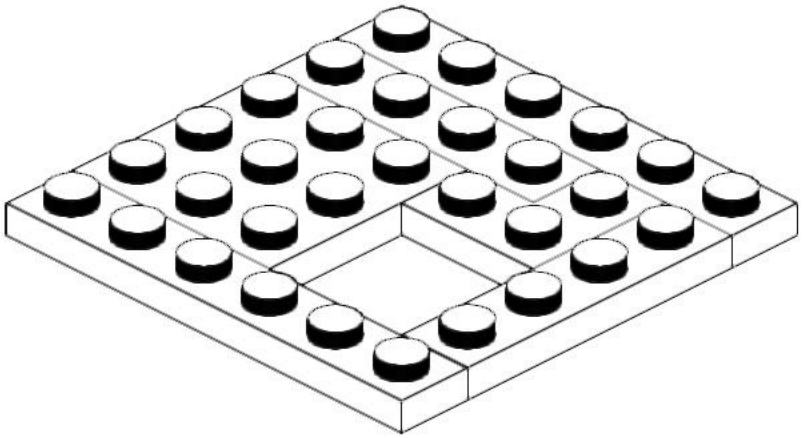

2

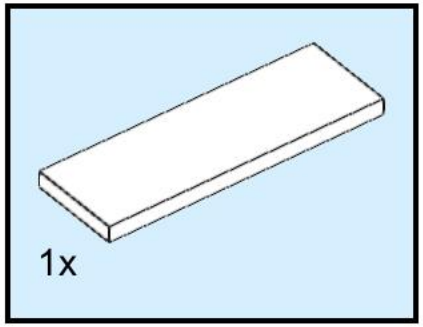

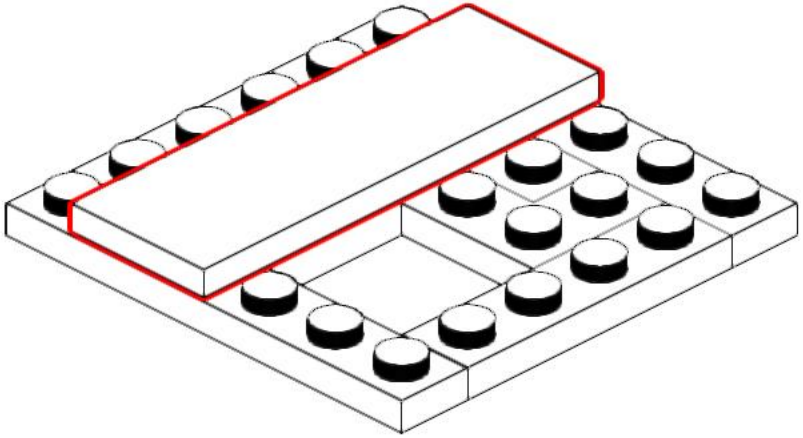

3

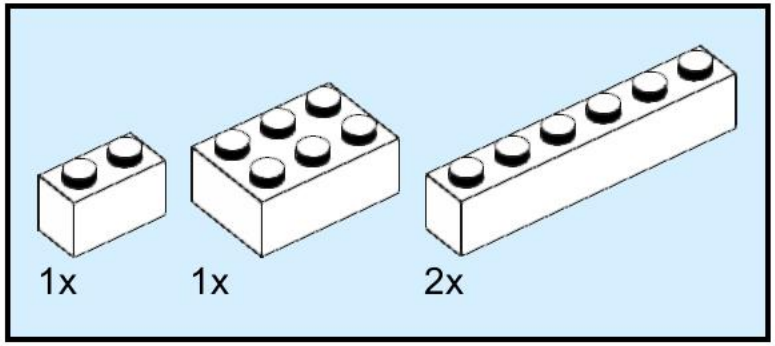

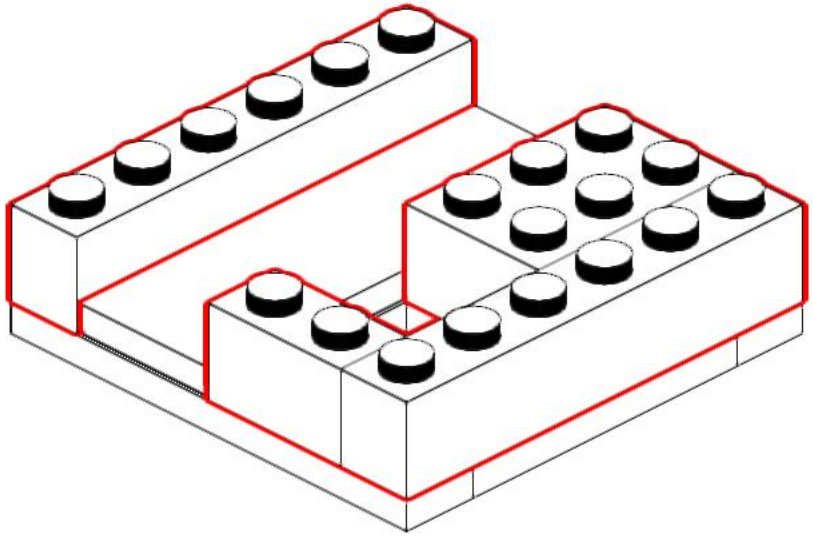

4

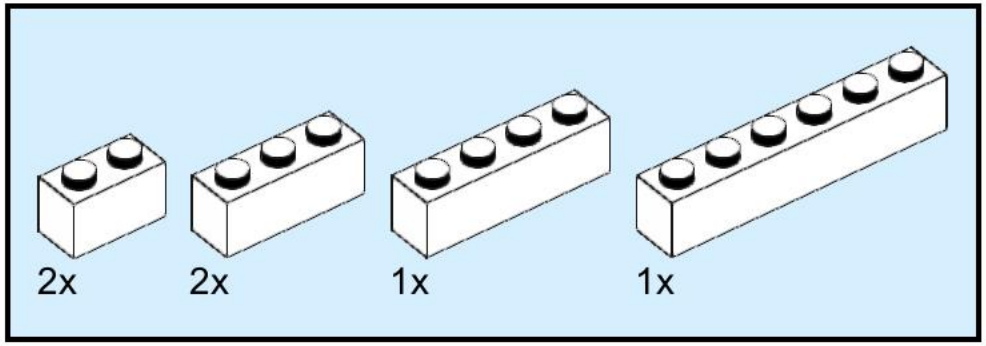

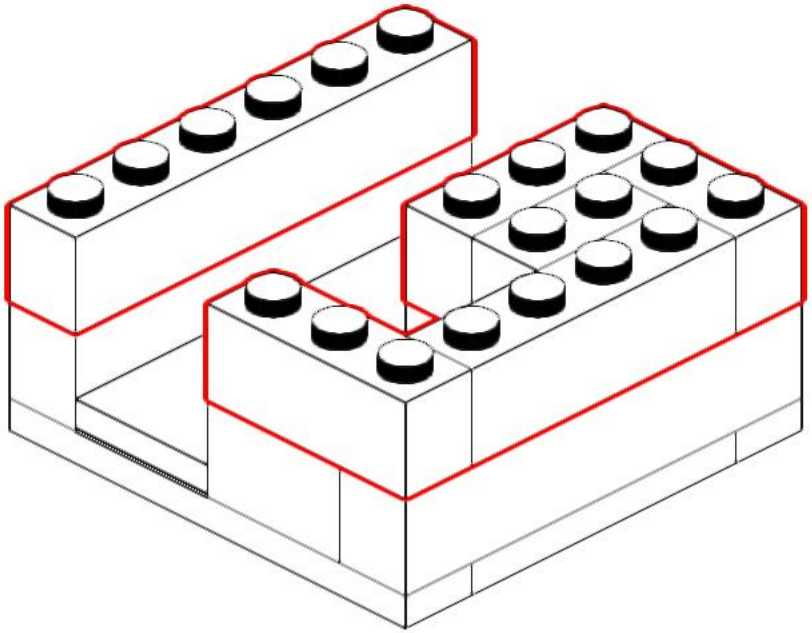

5

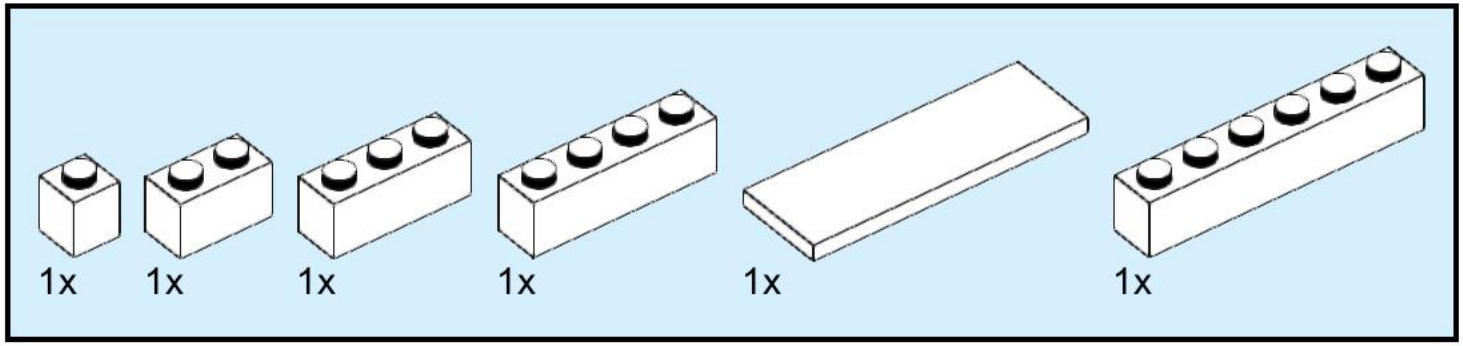

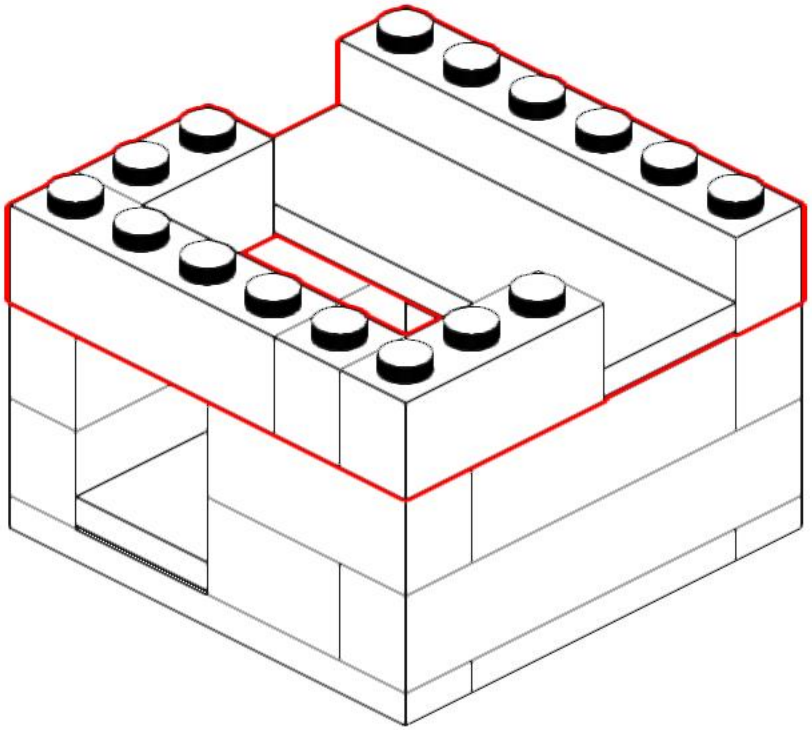

6

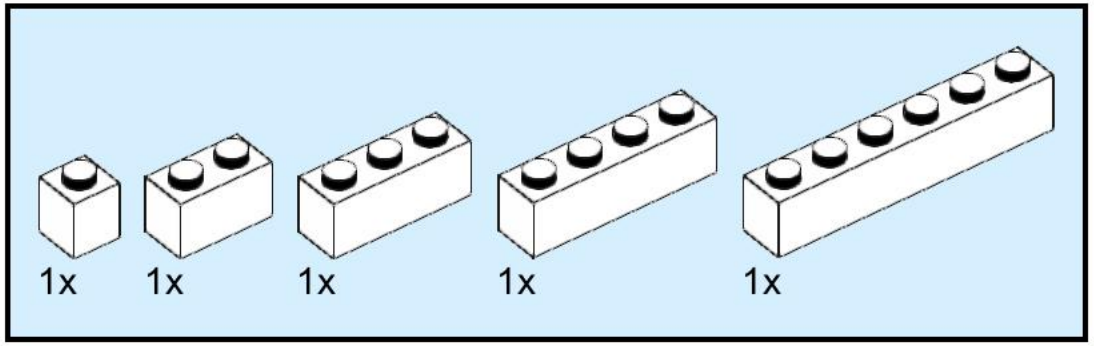

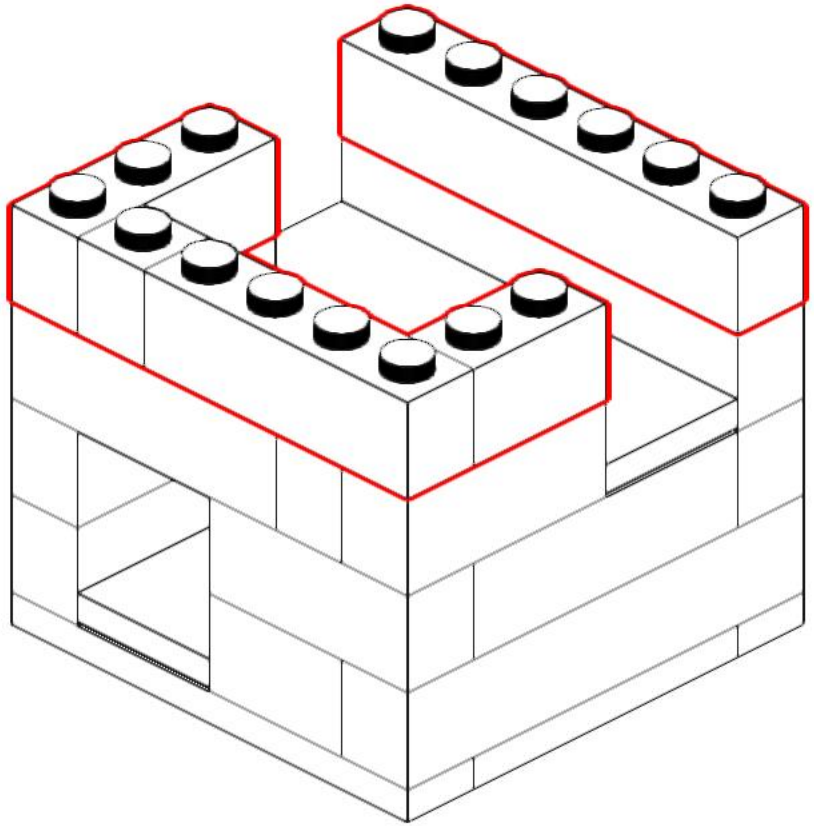

7

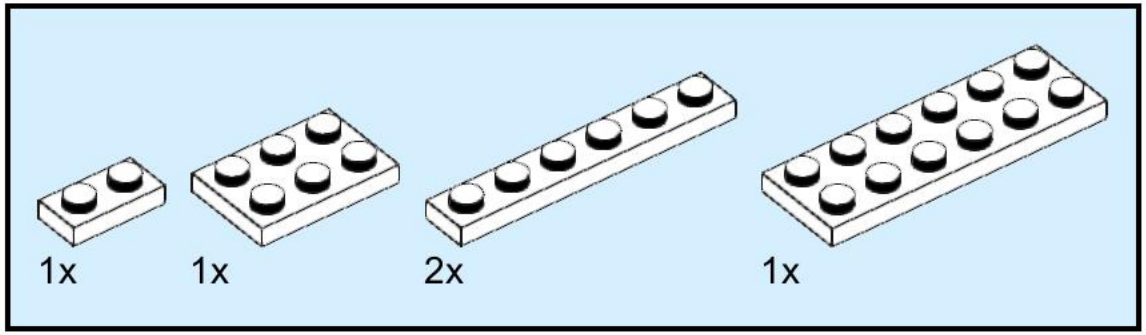

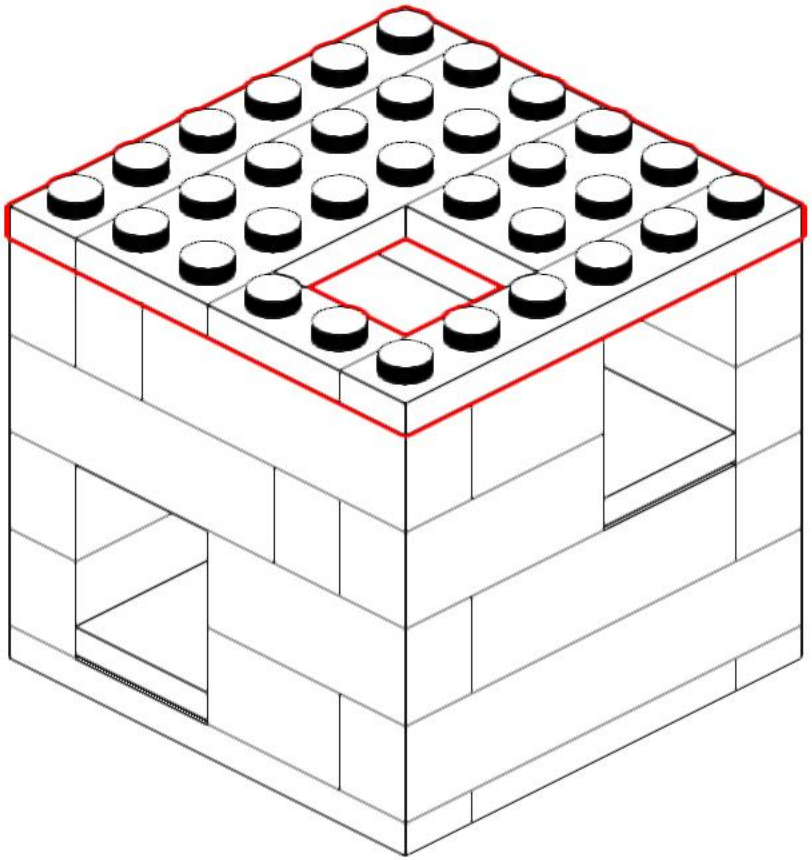

8

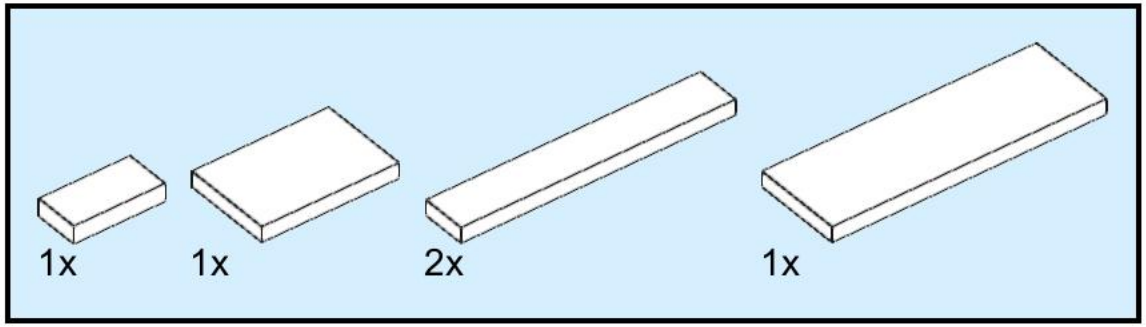

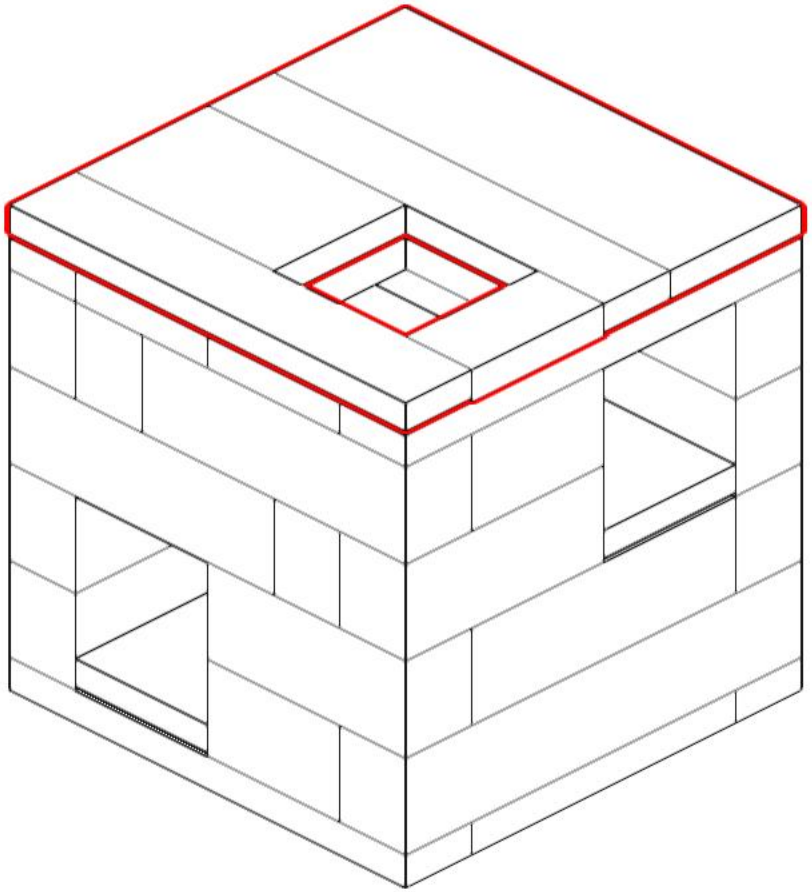

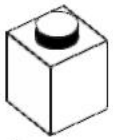

2x
3005, 1

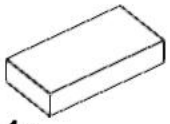

1x
3069a, 1

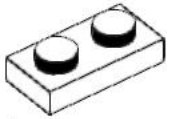

1x
3023, 1

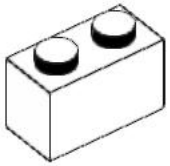

5x
3004, 1

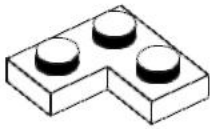

1x
2420, 1

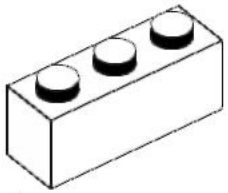

4x
3622, 1

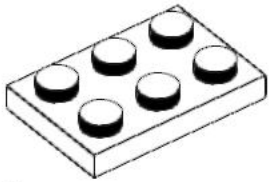

1x
3021, 1

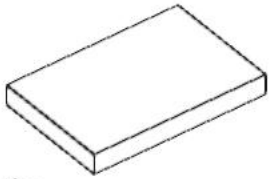

1x
26603, 1

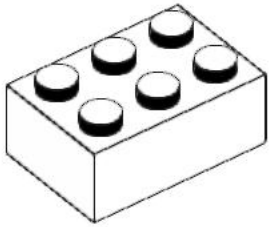

1x
3002, 1

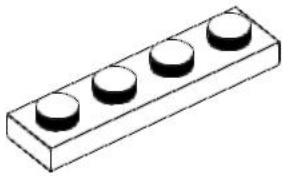

2x
3710, 1

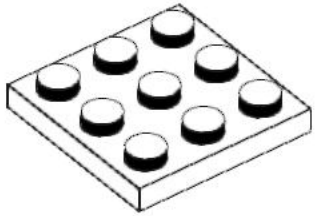

1x
11212, 1

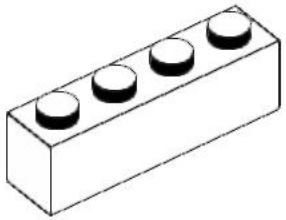

1x
3066, 1

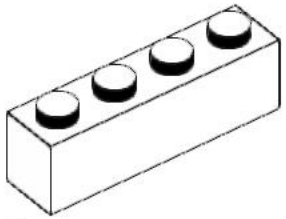

2x
3010, 1

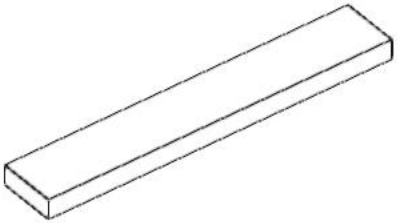

2x
6636, 1

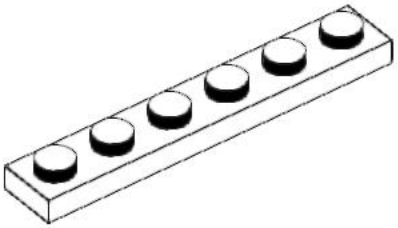

4x
3666, 1

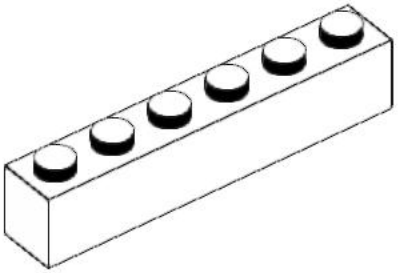

5x
3009, 1

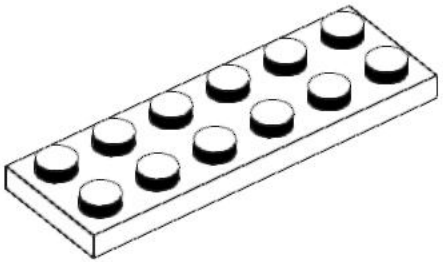

1x
3795, 1

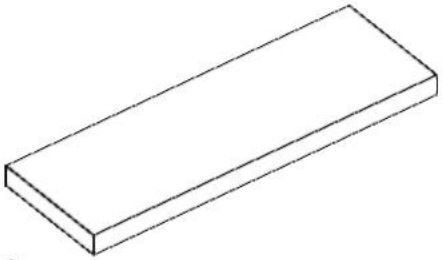

3x
69729, 1